◆

◆

/e
/`€ˆ —Òö¡ñB —Òö-"…Py}/j’ƒ y}/e

/e
/ež(1 —ÒöB‘(U —ÒöX • €Ñ‡B"…Py}/jÃâ…Py}/e
/dWâ…Py}/e
/e/d
/a[„p†Py}/jaÒö.Py}/d
/e`²…Py}/cçÂ…Py}/m

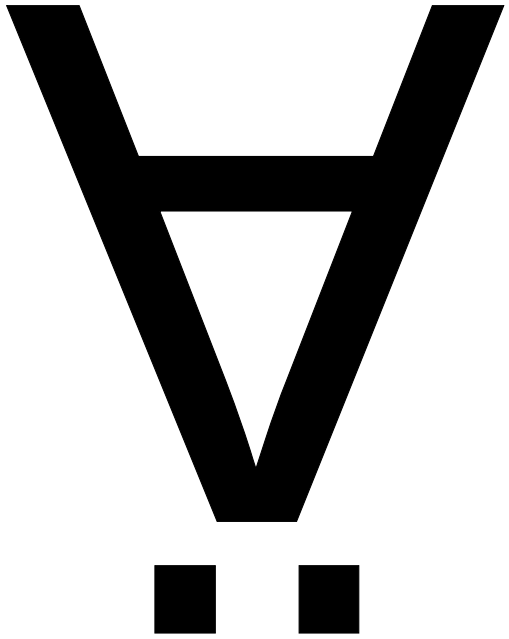

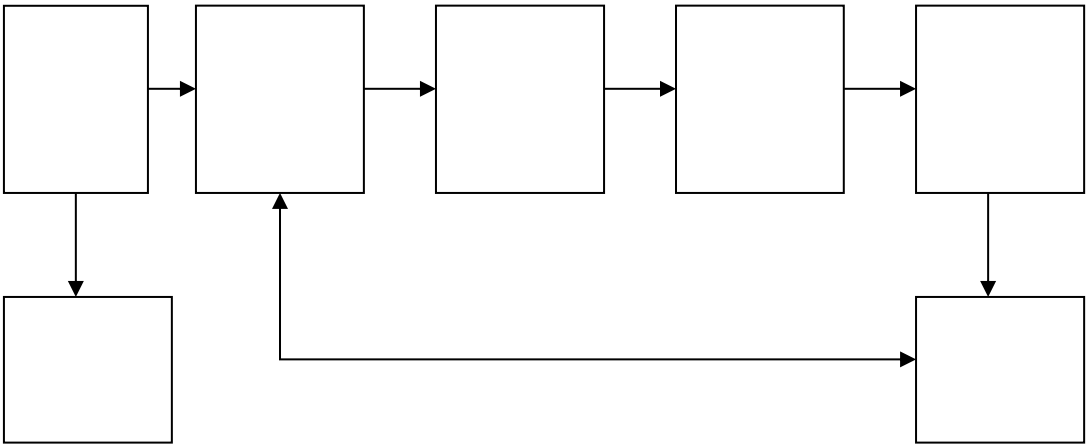

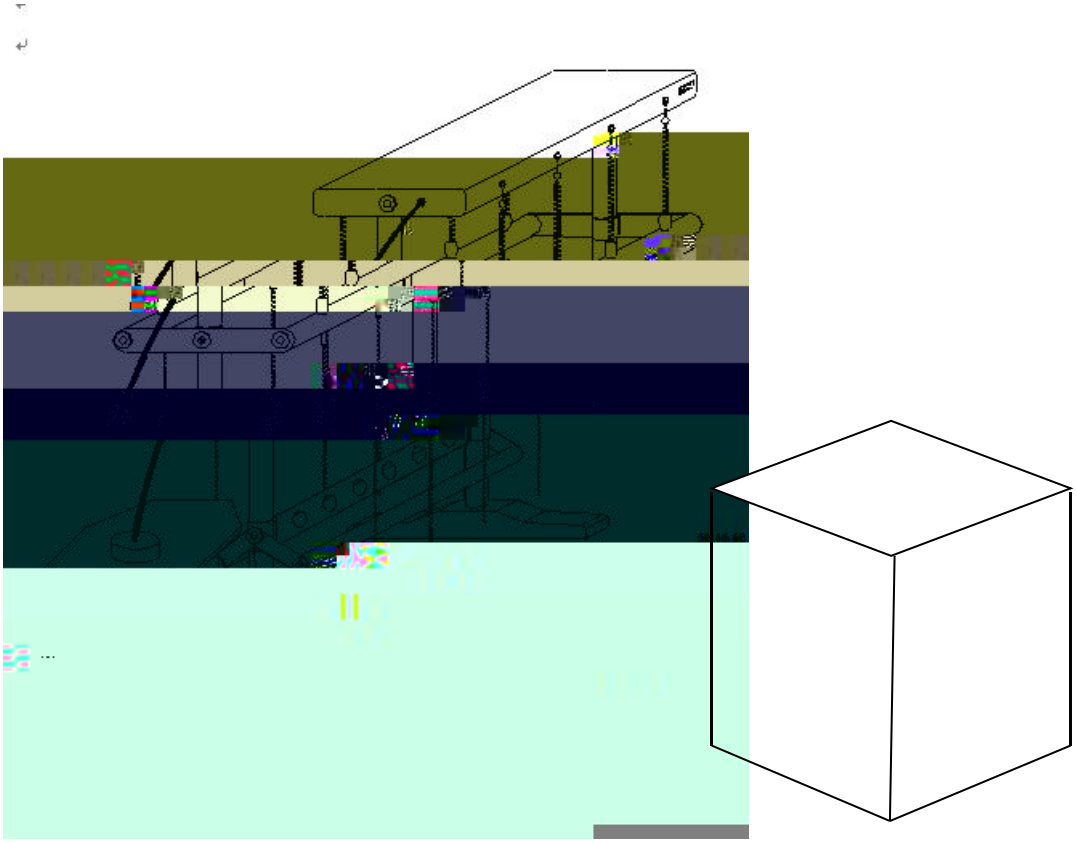

绝缘手
绝缘手
绝缘鞋
绝缘杆
绝缘服
绝缘绳
验电器
斗臂车
设置
历史数据

| | | | | | | |
|---|---|---|---|---|---|---|
| | | | | | | |
| | | | | | | |
| | | | | | | |
| | | | | | | |

| | | | | | | | | |
|---|---|---|---|---|---|---|---|---|
| | | | | | | | | |
| | | | | | | | | |
| | | | | | | | | |
| | | | | | | | | |
| | | | | | | | | |
| | | | | | | | | |
| | | | | | | | | |
| | | | | | | | | |
| | | | | | | | | |
| | | | | | | | | |

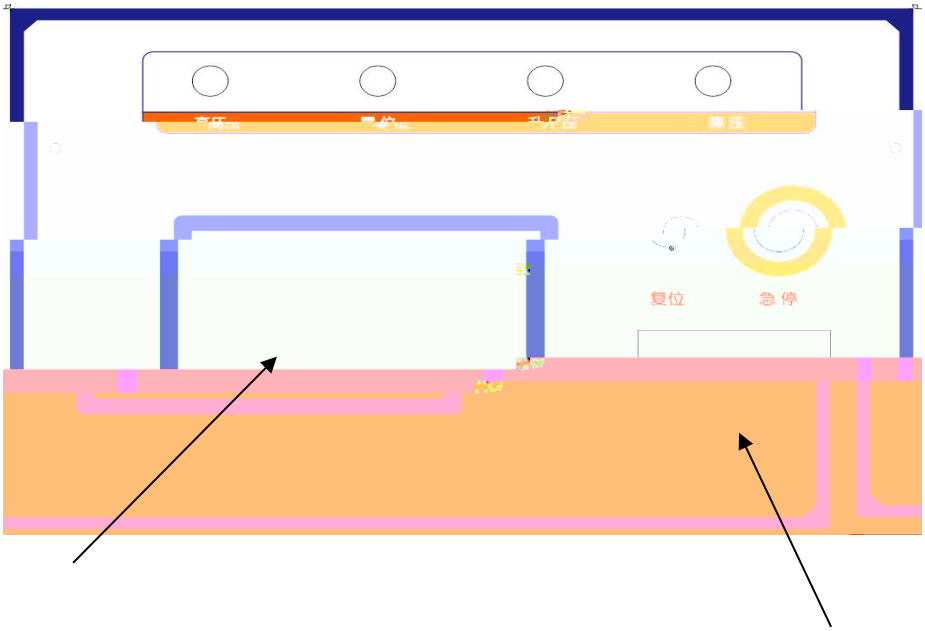
复位
急停