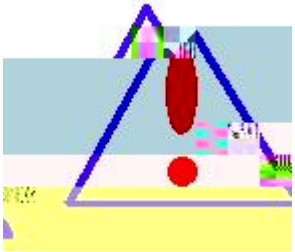

◆

◆

12
1
3
4
5
11
6
1
12
13
3
18
17

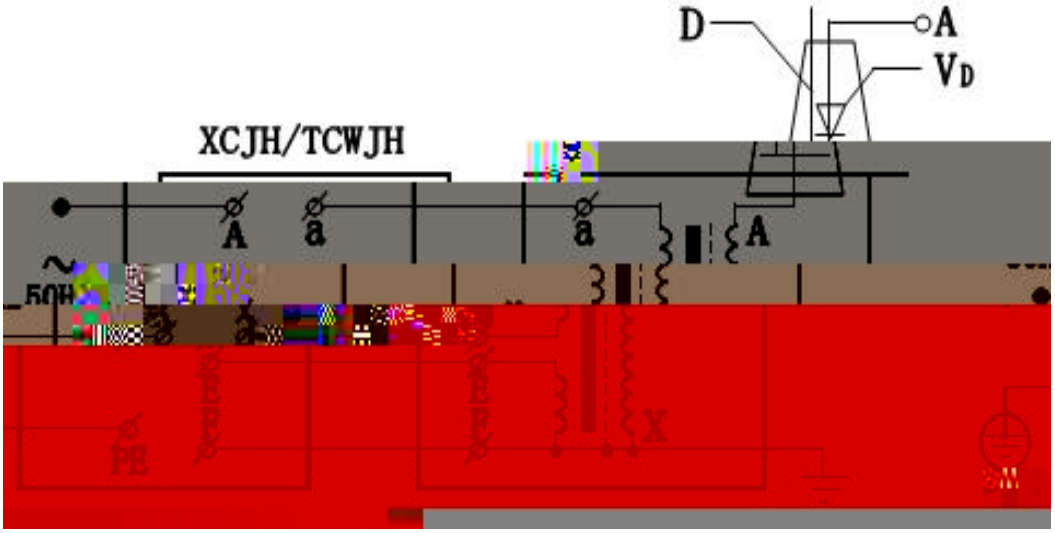
D
A
VD
XCJH/TCWJH
A
a
a
A
~
50H
X

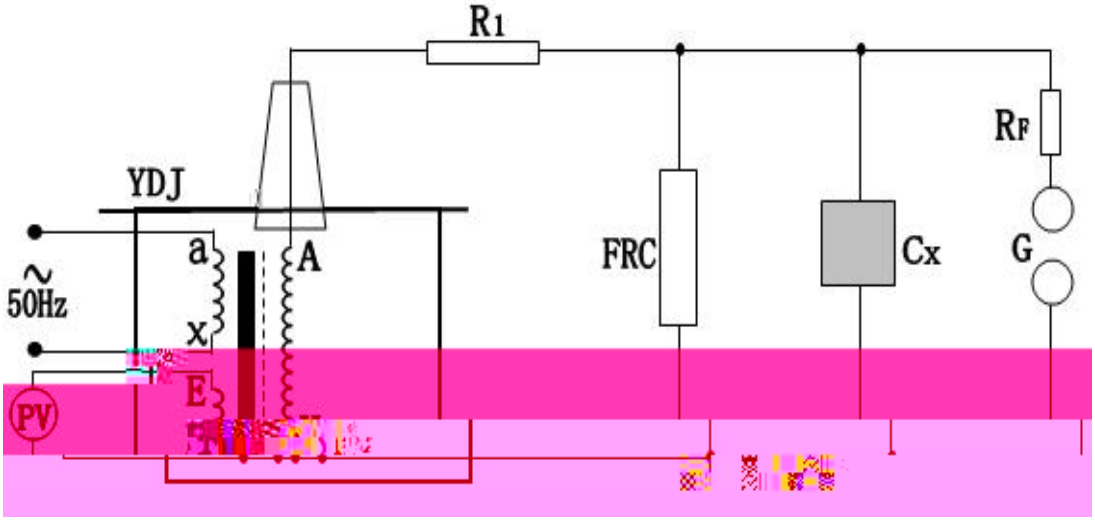
R1
RF
YDJ
a
A
FRC
Cx
G
~
50Hz
x
E
PV

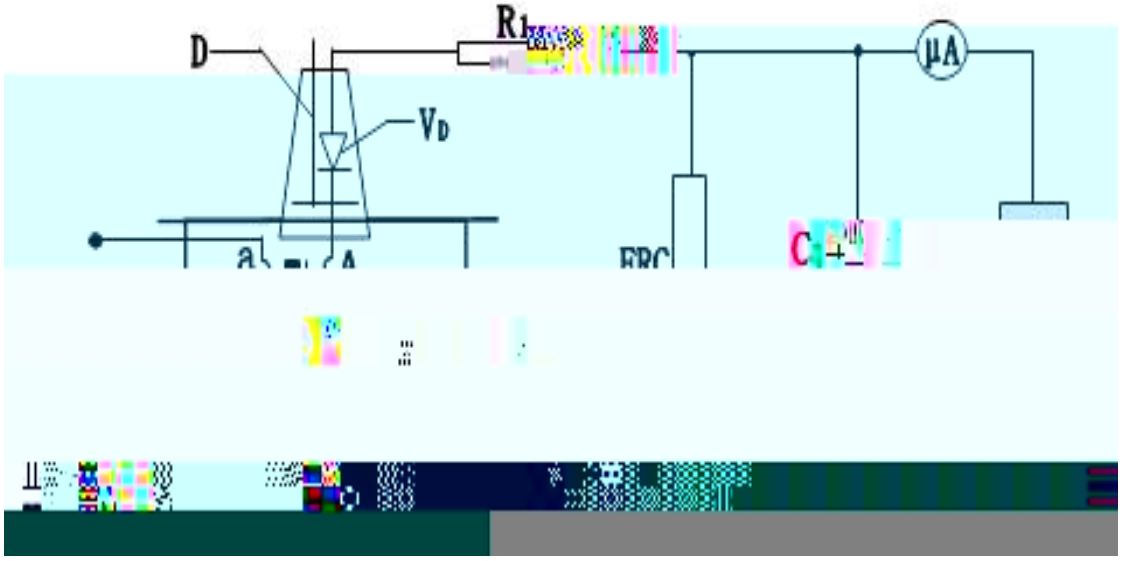
D
R1
VD
μA
C1

$\sqrt{}$